ASSEMBLY INSTRUCTIONS

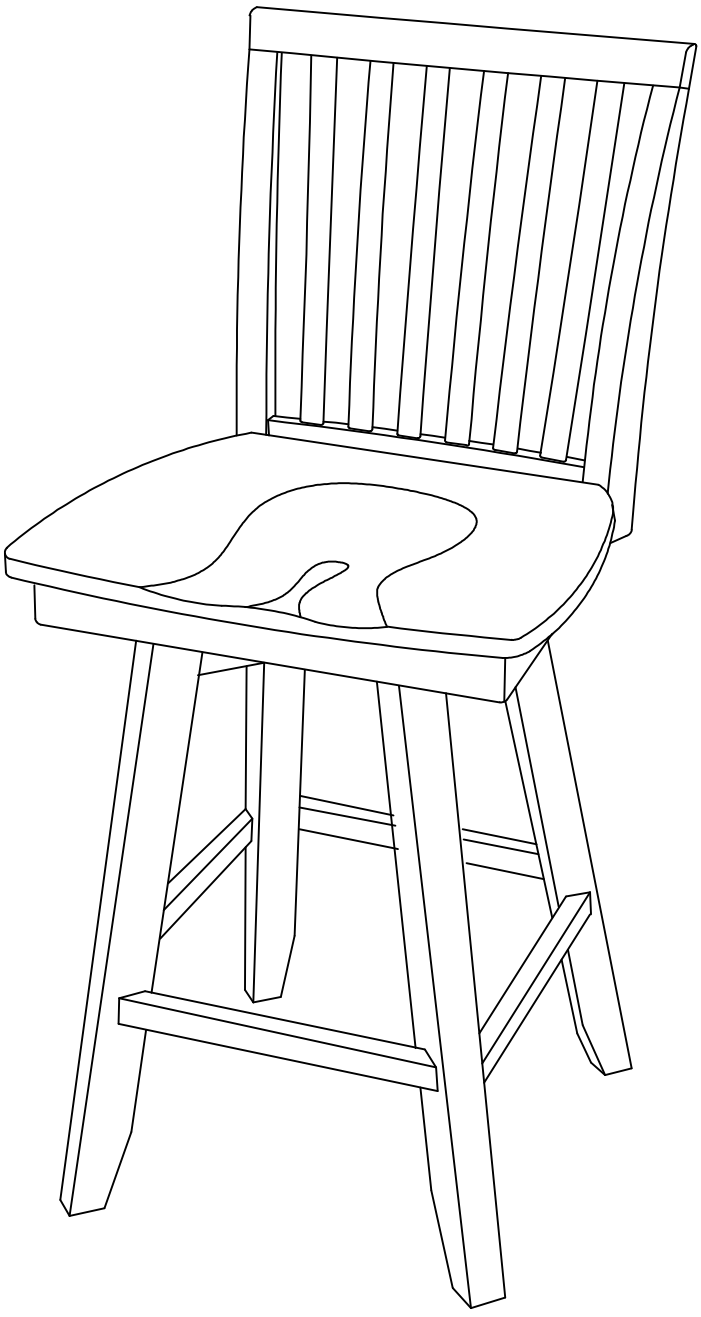

Description : 30 IN MISSION SWIVEL STOOL UNF
Item No. : S-263SW

ITEM NO. : S-263SW **Printed in Vietnam**
REVISED OCT 31, 2015

BEFORE ASSEMBLY

Thank you for purchasing this quality product. This product has been designed for easy assembly and constructed for durability. All parts were checked prior to packaging to insure quality. Prior to beginning assembly, however, make sure all parts and hardware are included and free of obvious defect. If a part is missing or defective, please contact the store where purchased. If hardware is missing, or you need help with assembly, please call toll free 888-944-8396.

IMPORTANT NOTE:

- Place all wooden parts on a clean and smooth surface such as a rug or carpet to avoid the parts from being scratched.
- Remove all wrapping material, including staples & packing straps before you start to assemble.
- DO NOT tighten all screws, bolts until completely assembled.
- Keep all hardware parts out of reach of children.

ASSEMBLY TOOLS REQUIRED

NOT INCLUDED

PART LIST

When unpacking, please be careful not to discard any parts with the packaging. Before continuing, please make sure you have all of the following parts:

NO	Description	Qty	Sketch	NO	Description	Qty	Sketch
A	Chair back	1	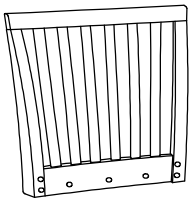	B	Seat Frame	1	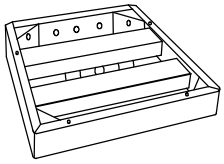
C	Leg	1	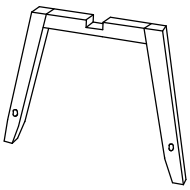	D	Leg	1	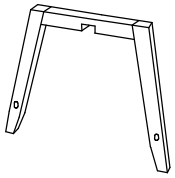
E	Stretcher	4	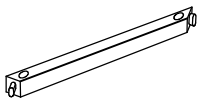	F	Chair Seat	1	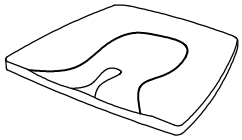

HARDWARE LIST

When unpacking, please be careful not to discard any parts with the packaging. Before continuing, please make sure you have all of the following hardware:

NO	Description	Qty	Sketch	NO	Description	Qty	Sketch
1	Short bolt (M6x30mm)	4	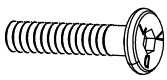	2	Medium bolt (M6x40mm)	4	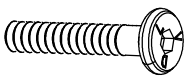
3	Long bolt (M6 x 80mm)	4		4	Wood Screw (M4 x 35mm)	12	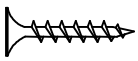
5	Lock Washer (Φ6.5 x 11mm)	12		6	Flat Washer (Φ6.5 x 19mm)	12	
7	Allen Key (M4 x 80mm)	1					

ITEM NO. : S-263SW **Printed in Vietnam**
REVISED OCT 31, 2015

STEP 1

Attach seat frame (B) to the back (A) with bolts (2) and (3), and washers (5) and (6) as shown below. Tighten with Allen key (7).
Note: DO NOT tighten any of the bolts, until the stool is assembled, then put on a flat level surface to make sure the stool is level and then tighten the bolts.

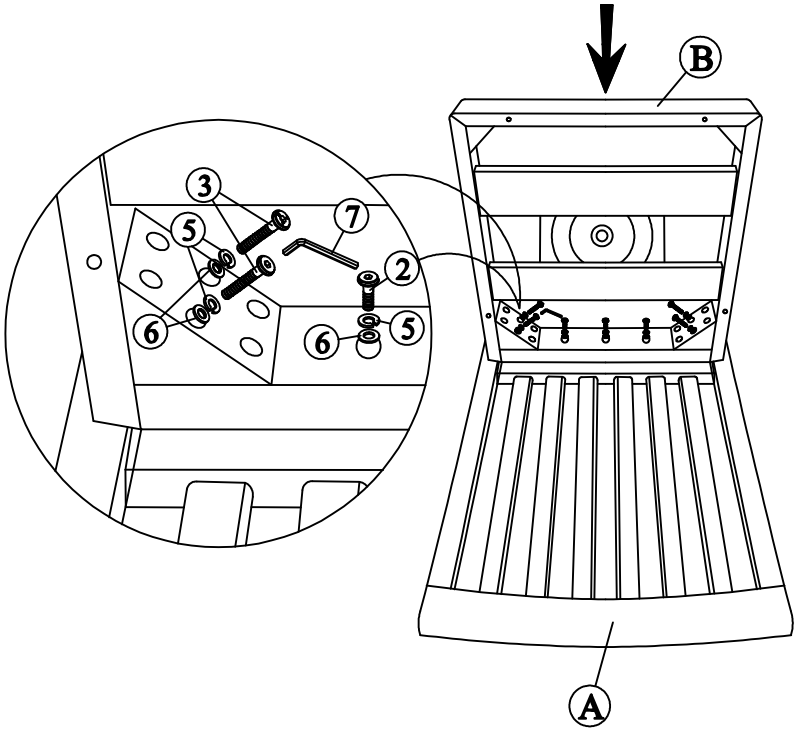

STEP 2

Attach the leg (C) to the leg (D) with bolts (2), and washers (5) and (6) as shown below. Tighten with Allen key (7).
Place stretchers (E) between legs (C) and (D), attach with screws (4) as shown below. Tighten with a screwdriver.

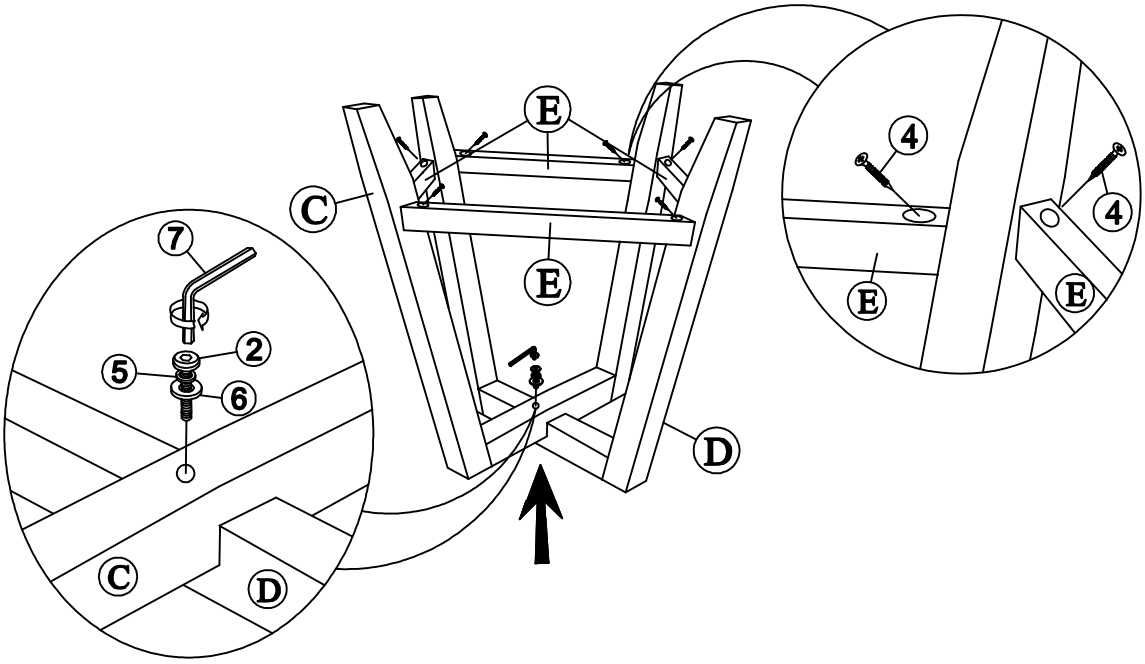

ITEM NO. : S-263SW **Printed in Vietnam**
REVISED OCT 31, 2015

STEP 3

Attach the swivel plate underneath the seat frame (B) to legs (C) and (D) with bolts (1), and washers (5) and (6), as shown below. Tighten with Allen key (7).

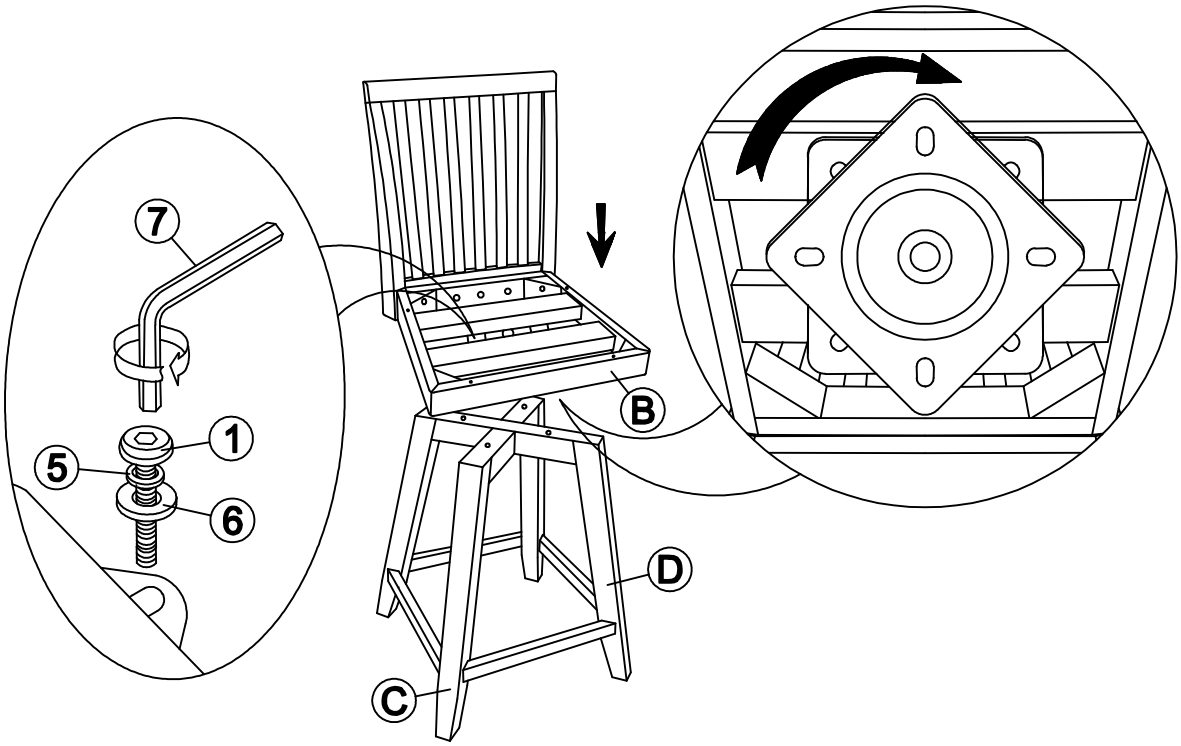

STEP 4

Attach the seat (F) to top of the seat frame (B) with screws (4). Tighten with a screwdriver.

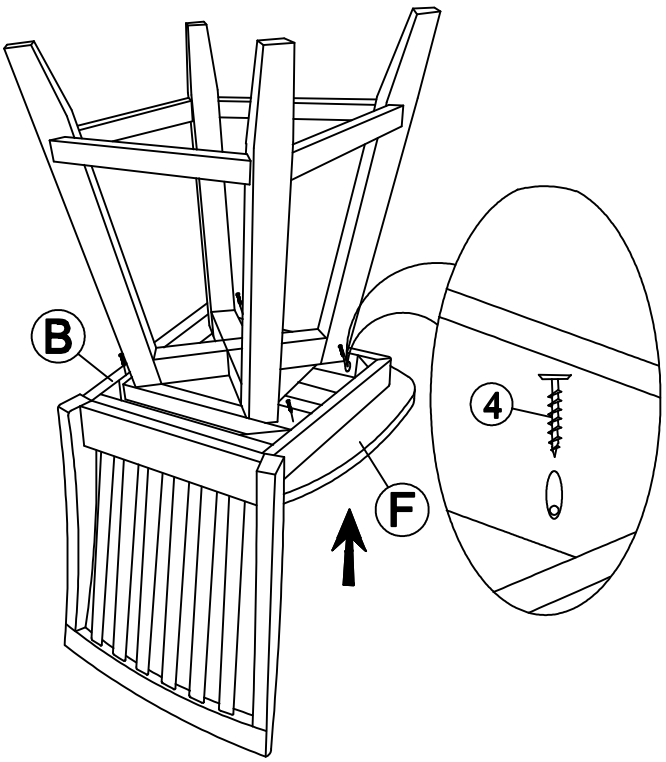

ITEM NO. : S-263SW **Printed in Vietnam**
REVISED OCT 31, 2015